SERVICE INFORMATION PERFORMA +

1. TABLE OF CONTENTS

2. GENERAL INFORMATION

2.1 Introduction.

The PERFORMA + is an appliance for pulsed shortwave therapy. The unit has 2 output channels and there are 2 different coil-field applicators.

In this chapter the important features from the users manual for service personnel are listed. In the next chapter the theory of operation will be explained. In chapter 3 is described how service personnel can check the operation of the Performa+ and in chapter 4 the adjustments which can be executed by technicians. The next chapter contains information which could be very useful for trouble shooting such as the description of the automatic self test and a list of the error numbers. The schematic diagrams are in chapter 6, together with the reference list and the spare parts list.

2.2 Safety aspects.

2.2.1 Electrical safety.

The equipment can only be used in areas with provisions in accordance with current statutory requirements. Pay particular attention to the use of protective earth, otherwise the patient leakage current can rise above the permitted limit for type BF equipment.

2.2.2 Explosion safety.

The equipment is not suitable for use in areas where flammable gasses or vapours are present. Therefore, remove the mains plug from the socket before the area in which the equipment is located is disinfected, since some disinfecting solutions evaporate and subsequently form an explosive mixture.

2.2.3 Safety of use.

- Patients who have electrical implants (i.e. pacemaker) may only be treated following medical advice.
- The equipment is not suitable for use in damp areas.
- The equipment may not be disinfected or sterilised.
- The device is fit for continuous use.
- Only use the original accessories.

2.2.4 Radio interference suppression and electromagnetic compatibility.

This equipment meets the guidelines for ISM equipment relating to electromagnetic compatibility and is radio interference suppressed according to IEC 601.1.
However, the 27.12 MHz signal might disturb …

2.2.5 Medical device directive (MDD)

This device complies with the essential requirements of the Medical Device Directive of the European Committee (93/42/CEE) as most recently changed.

2.3 Installation.

2.3.1 Incoming inspection.

Check that the equipment has not been damaged during transportation and that the accessories are intact and complete. In the event of damage and/or defect you should inform your supplier.

2.3.2 Mains voltage.

The appliance operates at a nominal voltage of 115 or 230 Volt AC(+/- 15%), 50-60 Hz. On the back of the appliance, you will find a label with the mains voltage. Check if the voltage is selected correctly (setting of another value than the value which should be used in your region can lead to irreversible damage of the equipment).

2.3.3 Functional test.

During production the equipment is tested for electrical safety. Whenever the equipment is switched on, the processor performs an extensive test to ensure that the equipment is operating correctly. In addition you must check whether the display and the indicator lamps are operating correctly. If this is not the case, do not use the equipment and contact Uniphy bv.

2.3.4 Selecting the operating language.

The device gives several language options.
To change the language settings, press the SELECT < and > keys while switching on the unit.You can now select the desired language by turning the rotary, the equipment will use the language you have chosen.

2.3.5 Location and transportation.

The equipment must be set up horizontally and stable. You must ensure that the perforated sections on the backside of the casing are not covered up, thus hindering air circulation.
For transportation only use the original packaging.

The appliance is capable, while packed for transport and storage, of being exposed to environmental conditions not outside the following ranges:

- a ambient temperature range of -20ºC to +60ºC;
- a relative humidity range of 10% to 100%, including condensation;
- an atmospheric pressure range of 500hPa to 1060 HPa.

3. *Technical specifications*

Mains power indications:

Mains voltage:	110 VAC, 230 VAC (+/- 15%) 50-60 Hz
Current consumption :	2.6 A (230 V) /600 VA
Mains fuses :	2 x 6.3F

3.1 Performance:

Frequency :	27.12 MHz
Channels :	2
Maximum peak power:	200 Watts
Maximum average power:	90 Watts
Maximum frequency 1 channel:	1125 Hz
Maximum frequency 2 channel:	800 Hz
Maximum treatment time:	60 min

Hardware information:

Dimensions:	38 x 44 x 95 (Width x Depth x Height)
Weight:	43 Kg
Weight of electrode-arm:	3.5 Kg
Classification:	Class I, type BF
Electrical safety standard:	IEC 601.1
Medical device directive (MDD):	CE 0197

4. OPERATION

4.1 General information.

The Phyaction performa+ is able to generate a maximum peak power of 200 Watts.
However, this power cannot be reached under all circumstances.

The maximum power under all circumstances = 230/SWR, with a maximum of 200 watts.

Under ideal circumstances S = 1 (perfect contact between plode and patient).

Suppose that the set power is 200 watts and S = 1.3: the output power is now 230/1.3= 177 watts instead of 200 Watts !

The unit has a contact control circuit: when S>1.4 the unit will give the message 'improve position of the applicator'. This means that S can never reach a value higher than 1.4.
In other words, if the set power = 165 Wpeak the unit is able to deliver this power within the range between good and bad contact.

5. Yearly checkup and safety test

5.1 Safety inspection.

To prevent the Performa+ from having hidden defects acquired during its lifecycle it is strongly recommended to have the device checked regularly for its proper functioning by qualified personnel. In some countries this is mandatory or your insurer may be requiring it. A record of these inspections should be filed so the measurements can be compared with earlier values to alert for a possible potentially dangerous tendency. For this purpose you can e.g. make copies of these pages.

5.2 Inspection interval.

The design of the device is based on a yearly inspection. If the legislation of your country or your insurer calls for a shorter period you should adhere to the latter.

5.3 Inspection results.

The inspection is passed when all items as presented on the standard document on the next page are passed. In the unlikely event the device fails the deviation should be repaired before using it. Repairs are only to be made by technicians authorised by Uniphy bv. Contact your supplier on this matter.

Checkup and safety document

5.3.1.1 Visual inspection

	Pass	Fail
The device record is present and kept up to date		
The user manual and the safety manual are present		
Device label and suppliers label are clearly readable		
The enclosure of the appliance is undamaged		
Mains entry and mains cable are undamaged		
Coax cables are undamaged		
The control knobs, keys and display are undamaged		
Only accessories listed in the user manual are being used		

5.3.2 General Functional Inspection

	Pass	Fail
The automatic self test on power up does not report any errors		
The display does not show any defective pixels or lines		
All keys are functioning		
The control knobs operate properly.		

5.3.3 Functional Inspection Shortwave therapy

	Pass	Fail
Check the different thermoplodes and adjust if necessary (chapter)		
Check the power output with the dummy load (chapter)		

5.3.4 Electrical Safety Test According to IEC 601.1

Parameter	Meas. Value	Limit	Comments	Pass	Fail
Protective earth resistance	Ω	< 0.2 Ω			
Enclosure leakage current	µA	< 1000 µA			
Patient leakage current	µA	< 5000 µA			

5.3.5 Result of safety inspection

The Performa+ with serial number …….. has passed / failed

Safety Inspector

Name:

Date:

Sign:

.....

6. Circuit description

6.1 Block diagram.

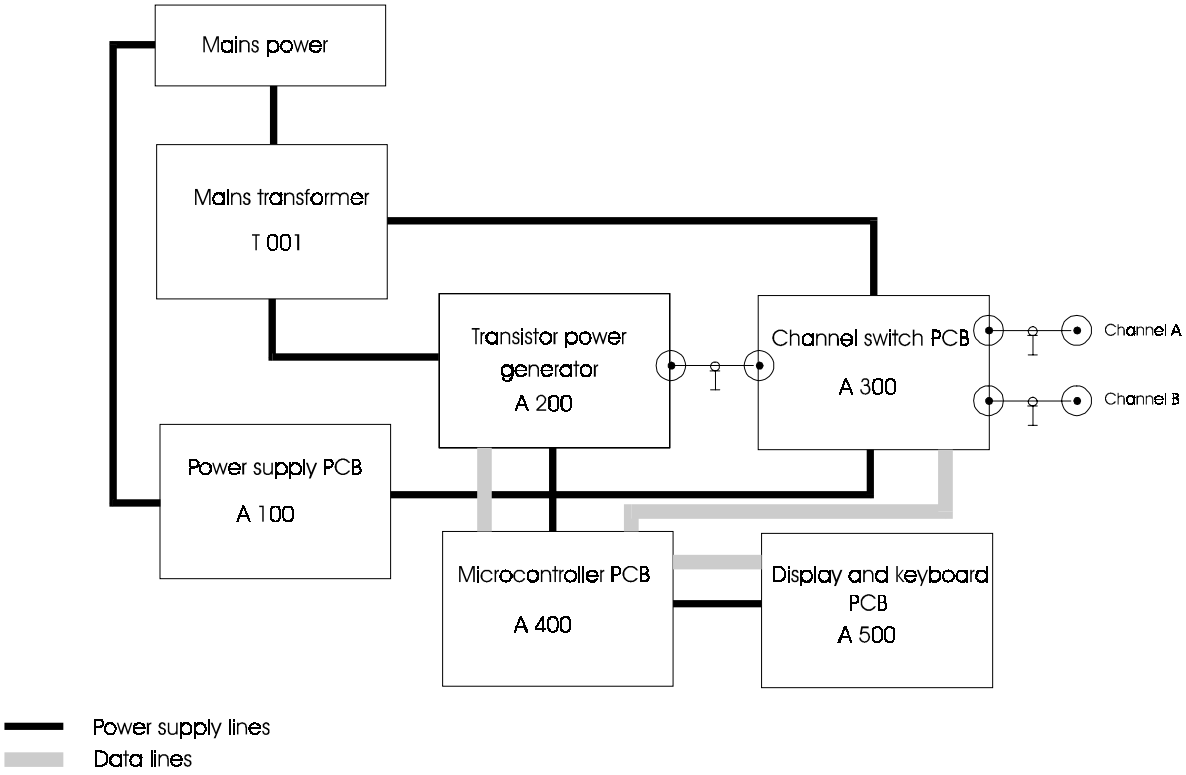

6.2

6.3 Mains power and mains transformer.

The Performa+ has to be connected to the mains via the fixed power cord, with a non-fused earth contact.
Always check whether the mains power corresponds to the mains input as indicated on the type shield (besides the mains cable).
Note: the mains cable always has to be replaced with the same type !

The mains transformer (T001) generates 3 different output voltages :

- 45 VAC non-fused
- 26 VAC with fuse 100 mA L
- 160 VAC with fuse 100 mA L

The transformer has built-in automatic thermal fuse. It will cut-off the primary winding when the temperature exceeds 135°C.
The transformer can be fed either with an incoming voltage of 230 VAC (+/- 15%) or with 115VAC

(+/- 15%).

6.4 Power supply (A100).

The PCB A 100 is a switched power supply, generating 3 different output voltages:

+ 15 VDC
+ 5 VDC
- 15 VDC

The power supply PCB has a 2 AL fuse.

6.5 Transistor power generator.

This module can be subdivided into three main sections. The first one includes the quartz stable generator, amplification and filtration of the 27,12 MHz high-frequency power.
The second includes the measurement and control circuits that enable an exact adjustment to the output power. The third section contains the control circuit of the operating voltage of the amplifier.

Any repair work of this sub-assembly shall only be performed by the manufacturer. However, there are some reference voltages that can be checked to determine the exact location of a defective part.
Please refer to chapter x for more details.

6.5.1 The quartz stable generator.

The oscillator circuit is composed round C82 (Quartz), V08, L10 and V09.
The base voltage of V08 must be about 3,6 VDC.
By means of L10, the amplitude of the signal is tuned to a voltage of about 10 Vpp to 13 Vpp.
This signal must be measured on the collector of transistor V09 (= cooling surface).
If necessary, the amplitude can be changed by adjusting the coil L10 (first take out the protective cover).

6.5.2 The level control circuit.

The intensity level control circuit is composed around V10, L12 and V11.
The input voltage at the basis of V10 has a range from 0 to 12 V. With a voltage below +2V the level control delivers no output power. The level control is set to full power with a voltage of about 12V to 14V.

6.5.3 The amplification circuits.

This circuit includes R252, C235,L213, V212, C238, C239, L216, V213, L219, L220, C263, C264, L221, L222, L226, C273, C274, C275.

The main amplifier is the V13: BLW 96C that is integrated as a class C amplifier.

The collector voltage of V13 will remain stable at a level of about 46 VDC.
This collector voltage is automatic controlled by the operating voltage control circuit (B 4207).
The thyristor V001 is triggered by the operating voltage control circuit and charges the capacitor C001 to 46 VDC. This is performed synchronously to the mains frequency.

6.5.4 Impedance matching and filter circuits.

The circuits around L19 and L20 match the impedance from 4 Ohm to exactly 50 Ohm.
It is important that the current consumption of the voltage control circuit (to be measured at X05) never exceeds 10 A (at 250 Watts with a 50 Ohm load).
By matching of L19 and L20 the output resistance can be influenced, thus influencing the voltage control current.

The circuits around L21, L22, L26, L27, R60 and R61 compose the bridged T-piece, acting like a bandpass-filter for 27,12 MHz.
This circuit is designed in a way that the attenuation for the 27,12 MHz signal is maximum 0.3 dB.

6.5.5 Power and mismatching meter.

Includes: C201 to C205, L224, L225, R201, R211, V203, V204.

The output power is measured by means of coil L24, measuring the output voltage and output current.
Measuring point X17 = Usum = proportional to sum of voltage and current.
Measuring point X18 = U diff = proportional to difference between voltage and current.

When the tuning between the generator and the patient is optimal (50 ohm load), there will be no dephasing between current and voltage. As a result Udiff will be 0 and U dif will be maximum.
When the tuning is not optimal the signal Udiff will be proportional to the mismatch.

Both the signals Us and Ud are fed to the adding and subtracting amplifier, resulting in two different signals:

X11: (Us - Ud)
X12: (Us + Ud)

Both the signals are presented to the microprocessor, which will calculate the standing wave ratio (SWR = S) and the power using the following formula:

$Up = K (Us + Ud) \times (Us - Ud)$.

Where K is a constant value that can be adjusted by means of R02, in order to have the same output power as indicated on the display.

In case S = 1, there is a perfect match between the generator and the load. If S > 1.4, the unit reports a bad contact between the applicator and the patient, and the power will be reduced to a minimum.

6.5.6 Setpoint and actual value comparator.

It includes: R221, R225, R226, C210, V214, N201/1.

Under normal conditions op-amp N01A will control the voltage level.
V01 will be open and V02 will be decoupled.

The cable voltage monitoring circuit is composed by opamp N01A and will be active when extreme mismatching occurs and a high RF power is required at the same time.
In that case V01 will be decoupled and V02 will open.
The maximum power of the generator will thus always be limited to about 270 watts.

In any case only 1 opamp controls the voltage level.

6.5.7 Channel switch PCB.

The Performa+ has two output channels (Left channel (L) and the right channel (R)). Since there is only 1 generator, the output power must be fed-through asynchronously to channel A and B.
The most important component for each channel are the diodes V4 and V5, acting like a High Frequency 'door'.
One channel will be locked by applying 400 V DC on the cathode of the diode, at the same time, the other channel will be open.

The signals L_Kanal and R_Kanal are pulse signals which are presented synchronously with the HF power coming in from the power generator.

There are two different coil-field electrodes.

- 14 cm coil field electrode
- 8 cm coil field electrode

The unit has a automatic electrode selection circuit. This is important to make sure that the user cannot select the wrong applicator and damage the electrodes by giving too much power.

The signals HL_APPL and HR_APPL are the applicator detection signals for the left and the right signals.

7. System diagnostics software

The unit constantly monitors a number of key-points in the unit. If any of these points exceed the limits, the unit will give the following message:

‘ CONTACT SERVICE DEPARTMENT’

Now press the two keys that light-up (Key ‘standard mode’ and Key ‘start/stop’).
The unit will display the measuring point where an error has been detected.

To check all the measuring points, it is possible to enter the service program.
To enter the service program switch on the unit while you keep both the keys ‘Standard’ and ‘Free mode’ pressed.

The service program displays all the different measuring points by turning the rotary knob.
Every measuring point is indicated with an M.

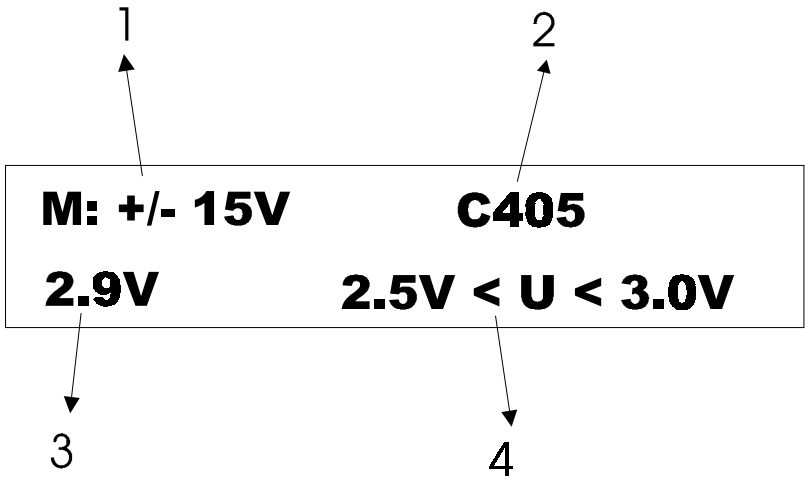

Indications in the service menu:

1. Measuring point: value that is checked in this program (+15V and –15 V).
2. On which component this value is measured (capacitor C405).
3. What is the measured value (3.1V).
4. What are the limits for this value (between 2.5V and 3.0V)

It is possible that some errors are only generated when the unit is generating a HF signal.
Therefore it is possible to generate a HF output while you monitor the measured values in the service program.

The generated HF power is a continuous signal that can be set up to 200 Watts. This power is needed in production to check the generator parameters.
For service purpose use the table below:

Important remark: not following these power settings, will damage the unit.

	Maximum power	Maximum time
14 cm coil-field	50 watts	5 min
8 cm coil-field	50 watts	5 min
Dummy load (directly to generator)	200 watts	1 min

7.1 The service screens.

Measuring point 1:

What is measured: +/- 15 V
Where can this voltage be measured:

- Output connector of the power supply board (A100):
  Black-blue: -15V
  Black-red: +15 V
- On the generator:
  +15 V on X06 (mass = generator housing)
  -15 V on X09
- Microcontroller PCB.
  On X 402 pin 1 and pin 4 (mass)

Measuring point 2:

What is measured: + 46 V DC
Where can this voltage be measured:

On C 0001 (big capacitor on top of the generator).

Measuring point 3:

What is measured: 400 V DC.
Use of this signal: this voltage is used to lock channel A or channel B.

Measuring point: X 402.5

Where can this voltage be measured: on capacitor C37 and C38, 200 VDC each.

Measuring point 4:

What is measured: temperature of the generator.
Use of this signal: to protect the generator for overheating.
Up measuring point: X 401.9
Service measuring point: temperature sensor on the right side of the generator.
Typical value: 2,7 V at 25°C
Limit values: between 1V and 4 V.

✍ The fan is able to work on two different speeds, depending on the temperature that is measured on the cooling surface of the generator.
In order to test the high speed mode of the fan, connect a 2.7K ohm resistor between the sensor and the cooling surface.

Measuring point 5:

What is measured: 26 VAC.
Use of this signal: synchronizing voltage for DC power source.
Up measuring point: C407
Service measuring point: X 203 on generator PCB and generator housing (mass).
Typical value (no power output): 2.8 V
Limit values: 1.8V and 3.0V

7.2 Measuring point 6

What is measured: PWM voltage
Use of the signal: DC voltage in relation to the peak power.
Up measuring point: D408.3
Service measuring point: ?
Typical value: 1.0 V
Limit values: 0V and 1.8 V
If this value is out of the limits: check the peak power adjustments.

7.3 Measuring point 7

What is measured: A200 uP input signal.
Use of the signal: signal in relation to power intensity.
UP measuring point: R409
Service measuring point: X07 on generator PCB.
Typical value (no output power): 2.0V
Limit values: between 0V and 5V.

7.4 Measuring point 8

What is measured: Us+Ud (U sum + U diff.)
Use of the signal: power calculation
UP measuring point: X 401.1
Service measuring point: X12 on generator PCB
Typical value: 2.8 V (with power 50 W cont, and S=1)
Limit value: between 0V and 4,9V

7.5 Measuring point 9

What is measured: Us-Ud (U sum - U diff.)
Use of the signal: power calculation
UP measuring point: X 401.2
Service measuring point: X11 on generator PCB
Typical value: 2.8 V (with power 100 W cont, and S=1)
Limit value: between 0V and 4,9V

7.6 Measuring point 10

What is measured: k x (Us + Ud)/(Us-Ud)

Use of the signal: measured power.
UP measuring point: X 401.3
Service measuring point:
Typical value: 1.5 V (with power 100 W cont, and S=1)
0.4V (no power output)
Limit value: between 0V and 3V

7.7 Measuring point 11

What is measured: L.Electr
Use of the signal: head size detection
UP measuring point: X 402.3
Service measuring point: con X5 on channel switch PCB Black-Brown
Typical value no head connected: between 1.6V and 1.8V
Typical value 8 cm head: 0V
Typical value 14 cm head: between 0.8V and 1V.

7.8 Measuring point 12

What is measured: R.Electr
Use of the signal: head size detection
UP measuring point: X 402.2
Service measuring point: con X5 on channel switch PCB Black-Pink
Typical value no head connected: between 1.6V and 1.8V
Typical value 8 cm head: 0V
Typical value 14 cm head: between 0.8V and 1V.

8. Calibration of the generator.

If the unit recognises a problem, it will generally show the message ‘contact service department’. By pressing the start/stop key and the standard mode key, the unit will show the measuring point where an error is detected.

However, besides the 12 measuring points there are some additional error messages:

- Pulse pause too much output.
- Left/right channel too less output.

If any of the messages above appear, first check all the measuring points of the service menu, and compare the measured values with the typical values (chapter 6).

If all the measured values appear to be correct, the generator must be recalibrated.

8.1 Generator calibration procedure.

It is strongly recommended to repeat the following calibration instruction after every repair.

8.1.1 Calibration of the start-up point of the generator.

When the unit is powered-up, the generator may not produce any HF-power. However, it must be calibrated in a way that any additional level input of the microcontroller will result in a HF output power.
In other words, the generator must be calibrated just before the startup point.

<u>Calibration procedure:</u>

1. Connect a 14 cm thermoplode to the left output connector.
2. Open the unit and the generator cover.
3. Connect a 50 Ohm dummy load directly onto the generator output socket.
4. Switch on the unit (no output power !).
5. Connect a digital multimeter to X 12 (Us +Ud) (generator PCB).
6. On the microcontroller PCB: turn potmeter (usually clockwise) until the measured voltage on X12 raises.
7. Now turn R30 counter clockwise until the voltage reaches its lowest value (typical < 0.1V).
8. Connect the multimeter to X07 (generator PCB) and read the value.
9. Adjust the measured value 100 mV less by turning R30 (typical 1.7 VDC).

8.1.2 Calibration of the maximum average power.

This procedure explains how to calibrate the maximum average power of the performa+.
It must be measured directly on the generator output.
The maximum average power is:
230 W (maximum peak power) x 0.45 (maximum duty cycle) = 103 W.
Due to attenuation of the channel switch PCB, this will result in a maximum average output power of 90 W eff.

Calibration procedure:

1. Connect a 14 cm thermoplode to the left output connector.
2. Open the unit and the generator cover.
3. Connect a 50 Ohm dummy load directly to the generator.
4. Switch on the unit.
5. Turn the potmeter R37 maximum clockwise (to disable the software power check).
6. In standard mode: raise the intensity to 90 W eff.
7. Measure and adjust the output power to 103 W with R202 (on generator PCB).
   (Voltage on 50 Ohm dummy load: 7 VDC)
8. Now measure the voltage on R25 (left side) and adjust it with R 37 to approx. 4.4 VDC.

9. *Unit checkup procedure*

Tools required:

- Dummy Load 50/100 Ohm
- λ/2 cable
- Reference electrode

9.1 Generator power check.

Connect the dummy load (50 Ohm) directly to the generator (always use the λ/2 cable) and connect a 14 cm head on the left output channel.
Switch the unit on and select the standard mode.
Measure the voltage on the output sockets of the dummy load.

Set power (standard mode)	Voltage on dummy load
4.5 Watt	1.9 VDC
27 Watt	4.0 VDC
45 Watt	5.1 VDC
72 Watt	6.3 VDC
90 Watt	6.9 VDC

9.2 Check of the SWR.

Connect the dummy load (50 Ohm) directly to the generator (always use the λ/2 cable) and connect a 14 cm head on the left output channel.
Switch on the unit in service mode (chapter)
Press the 'INDICATION' key in order to select the left channel.
Turn up the intensity (50 watt , maximum 30 seconds) and check whether the SWR ratio (S) = 1

Repeat the same test with the 100 Ohm dummy load: the SWR ratio should now be $1.4 < S < 1.6$.

10. Calibration of the coil field electrode.

Tools required:

- Dummy Load 50/100 Ohm
- λ/2 cable
- Reference electrode
- Calibrated water (SWR 1)

10.1 General.

The schema of the plode consists out of three capacitors (figure below):

C1: Fixed capacitor.
C2: Tuning capacitor.
C3: Metal cage + shield

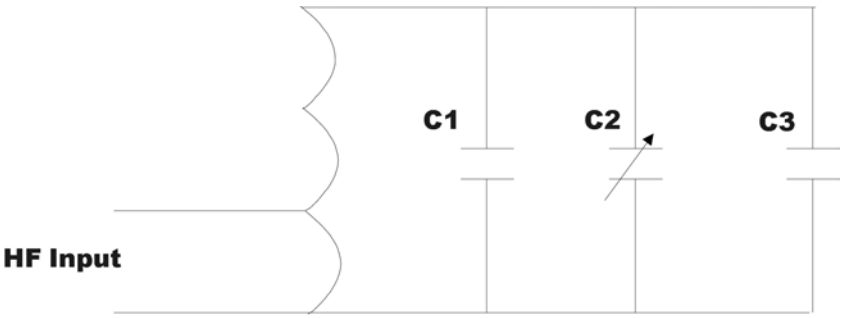

The tuning capacitor is accessible from outside, and allows a calibration of the plode.

10.2 Different types of coil field plods.

There are 2 different coil field electrodes:

14 cm coil field electrode
8 cm coil field electrode

The table below indicates the performance of each plode in all different configurations.

	Maximum average power	Maximum pulse-width	Maximum Frequency
Left 8cm/right 8 cm	**32 Watts**	**400 µsec**	**400 Hz**
Left 14cm/right 14cm	**64 Watts**	**400 µsec**	**800 Hz**
Left 8cm/right 14 cm	**32 watts**	**400 µsec**	**400 Hz**
Left 14cm/right 8 cm	**32 watts**	**400µsec**	**400 Hz**
One plode of 8 cm	**32 watts**	**400 µsec**	**400 Hz**
One plode of 14 cm	**90 watts**	**400 µsec**	**1125 Hz**

10.3 Performance check of the electrode.

Before any adjustment on the electrodes shall be done, it is very important to make 100% sure that the problem is the electrode and not the unit.

Therefore it is strongly recommended to first check the unit with the reference electrode and the dummy load (chapter 8, check of the SWR).
If both the reference electrode and the dummy load appear to function perfectly on the unit, the following calibration procedure must be done.

1. Check whether the unit recognizes the right head.
2. Connect the reference electrode to the left output connector (same size as the defective electrode).
3. Install the electrode in front of the water tank.
4. Connect the defective electrode directly to the generator by means of the $\lambda/2$ cable.
5. Switch on the unit in service mode and select the left channel.
6. Turn up the intensity to 50 watts and check whether the SWR ratio =1
7. If the SWR is different from 1, the thermoplode needs to be recalibrated.

✍ If the SWR is far different from 1, maybe the plode had a shock. Open the plode to check whether the components inside are ok (chapter)

10.4 Recalibration of the plode.

1. Start up under the same conditions as indicated in 9.2.
2. Turn the intensity to zero.
3. Adjust the capacitor with one turn and remove the screwdriver (photo)
4. Turn up the intensity and check whether the SWR changed in the right direction.
5. Readjust the capacitor electrode if necessary.

✍ Always remove the screwdriver before checking the SWR.
✍ If the value SWR = 1 cannot be reached, the plode must be sent to Uniphy for recalibration with specialized measuring equipment.

10.5 Contact control.

The unit permanently controls the contact between plode and patient. This system is integrated for different reasons:

- In case of A-thermic treatment, the patient will not feel any heat. Without a contact control, the patient wouldn't know if he is close enough to the plode, in order to assure an effective treatment.
- When the patient moves away from the plode, a part of the forwarded HF energy will be reflected.
  As a result, the plode will start heating-up, more than usually, and there will be a risk of burning the plode and the patient (when he touches the plode).
  The maximim temperature of the plode is limited to 55°C.

If the unit measures a SWR > 1.4, the display will indicate the message: 'improve position of coil field electrode'.

In order to have a SWR of 1 during treatment, the following conditions must be fulfilled:

- The treated tissue is at least as large as the surface of the electrode.
- The coil field electrode must touch the patient.
- The treated tissue contains enough water.

If any of these conditions are unfulfilled, the SWR ratio be higher.

10.6 Opening the coil field electrode.

1. Remove the front cover (3 screws).
2. Check if there are any irregularities inside the plode.
3. When really necessary open the rest of the plode (step 4-6)
4. Remove the shield on top.
5. Remove the metal cage.
6. Replace parts is necessary.
7. Reassemble the plode.
8. Repeat the calibration procedure (9.3).

✐ The shield and the metal cage are parts that may influence the calibration. Only open the cage when it is really necessary.

11. Photo's of the different parts.

11.1.1

12. Spare parts

13. Circuit diagrams

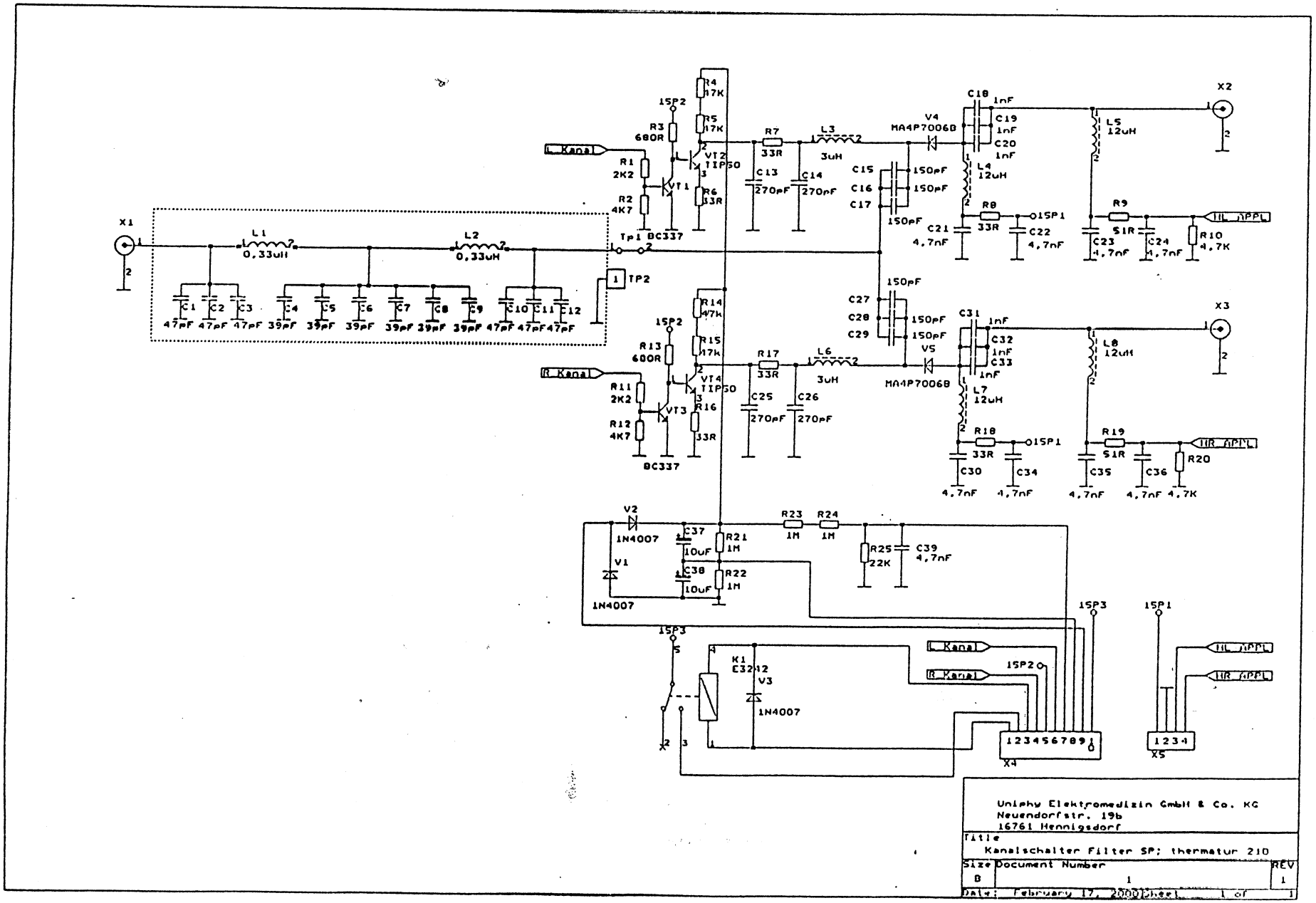
X1
X2
X3
X4
X5
L1 0,33uH
L2 0,33uH
L3 3uH
L4 12uH
L5 12uH
L6 3uH
L7 12uH
L8 12uH
C1 47pF
C2 47pF
C3 47pF
C4 39pF
C5 39pF
C6 39pF
C7 39pF
C8 39pF
C9 39pF
C10 47pF
C11 47pF
C12 47pF
C13 270pF
C14 270pF
C15 150pF
C16 150pF
C17 150pF
C18 1nF
C19 1nF
C20 1nF
C21 4,7nF
C22 4,7nF
C23 4,7nF
C24 4,7nF
C25 270pF
C26 270pF
C27 150pF
C28 150pF
C29 150pF
C30 4,7nF
C31 1nF
C32 1nF
C33 1nF
C34 4,7nF
C35 4,7nF
C36 4,7nF
C37 10uF
C38 10uF
C39 4,7nF
R1 2K2
R2 4K7
R3 680R
R4 17K
R5 17K
R6 33R
R7 33R
R8 33R
R9 51R
R10 4,7K
R11 2K2
R12 4K7
R13 680R
R14 17k
R15 17k
R16 33R
R17 33R
R18 33R
R19 51R
R20 4,7K
R21 1M
R22 1M
R23 1M
R24 1M
R25 22K
VT1 BC337
VT2 TIP50
VT3 BC337
VT4 TIP50
V1 1N4007
V2 1N4007
V3 1N4007
V4 MA4P7006B
V5 MA4P7006B
K1 E32-12
Tp1
TP2
15P1
15P2
15P3
L Kanal
R Kanal
HL APPL
HR APPL
1 2 3 4 5 6 7 8 9 10
1 2 3 4
Uniphy Elektromedizin GmbH & Co. KG
Neuendorfstr. 19b
16761 Hennigsdorf
Title
Kanalschalter Filter SP; thermatur 210
Size B
Document Number 1
REV 1
Date: February 17, 2000
Sheet 1 of 1

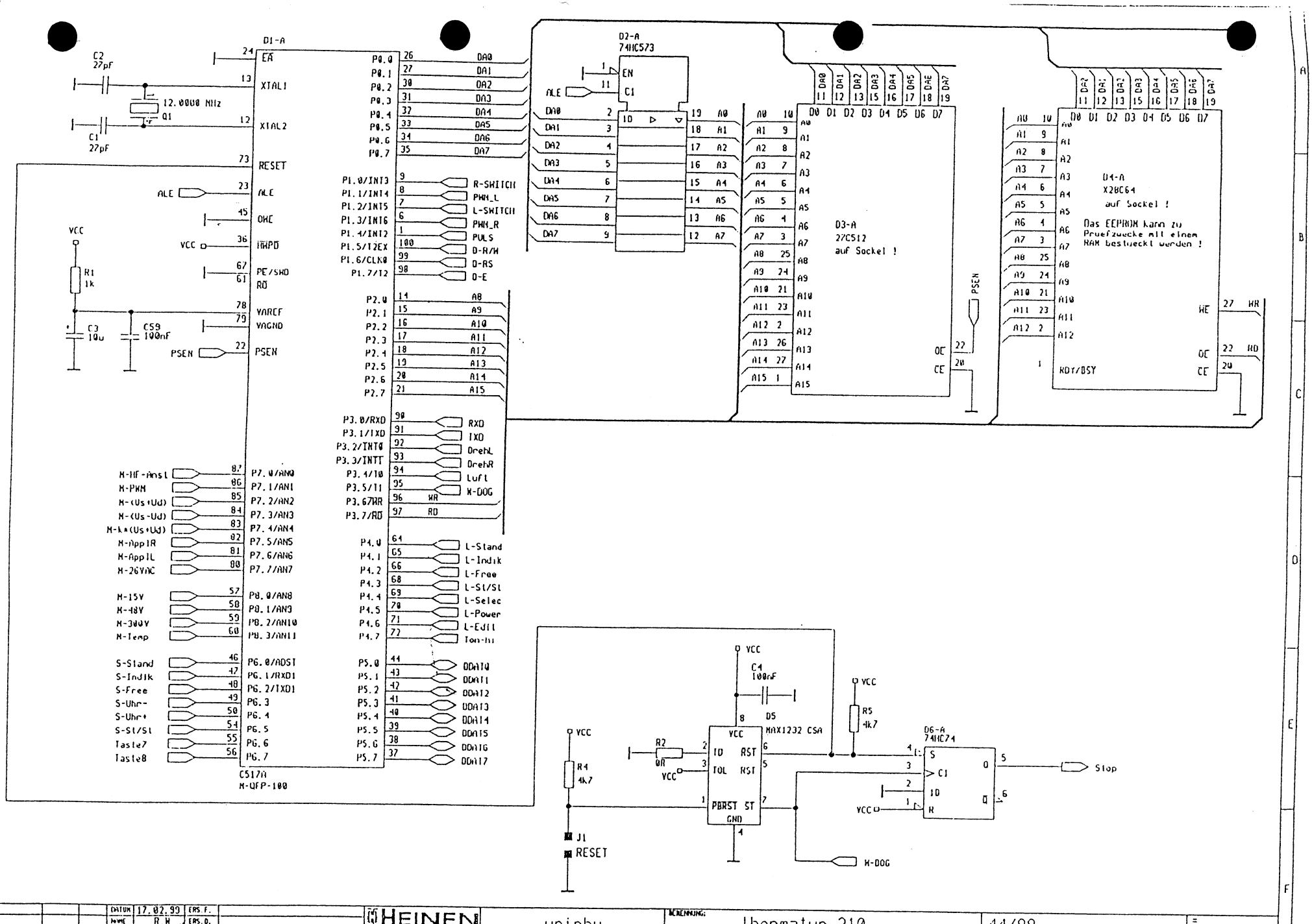
D1-A
C517A
M-QFP-100
C2 22pF
C1 22pF
12.0000 MHz
Q1
XTAL1
XTAL2
EA
RESET
ALE
OWE
PE/SWD
RD
VAREF
VAGND
PSEN
VCC
R1 1k
C3 10u
C59 100nF
D2-A
74HC573
EN
C1
D3-A
27C512
auf Sockel !
D4-A
X28C64
auf Sockel !
Das EEPROM kann zu Pruefzwecke mit einem RAM bestueckt werden !
RDY/BSY
R-SWITCH
PWM_L
L-SWITCH
PWM_R
PULS
D-R/W
D-RS
D-E
RXD
TXD
DrehL
DrehR
Luft
M-DOG
L-Stand
L-Indik
L-Free
L-St/St
L-Selec
L-Power
L-Edit
Ton-hi
M-HF-Ansl
M-PWM
M-(Us+Ud)
M-(Us-Ud)
M-k*(Us+Ud)
M-Appl R
M-Appl L
M-26VAC
M-15V
M-48V
M-300V
M-Temp
S-Stand
S-Indik
S-Free
S-Uhr-
S-Uhr+
S-St/St
Taste7
Taste8
DDAT0
DDAT1
DDAT2
DDAT3
DDAT4
DDAT5
DDAT6
DDAT7
C4 100nF
D5 MAX1232 CSA
R2 0R
R4 4k7
R5 4k7
D6-A
74HC74
Stop
J1
RESET
HEINEN ELEKTRONIK
uniphy
Elektromedizin
thermatur 210
Microcontroller
44/99
C517A Div.
R.W
17.02.99
AG3105-7.2-000 42797
06318 5-7.2-000A-3

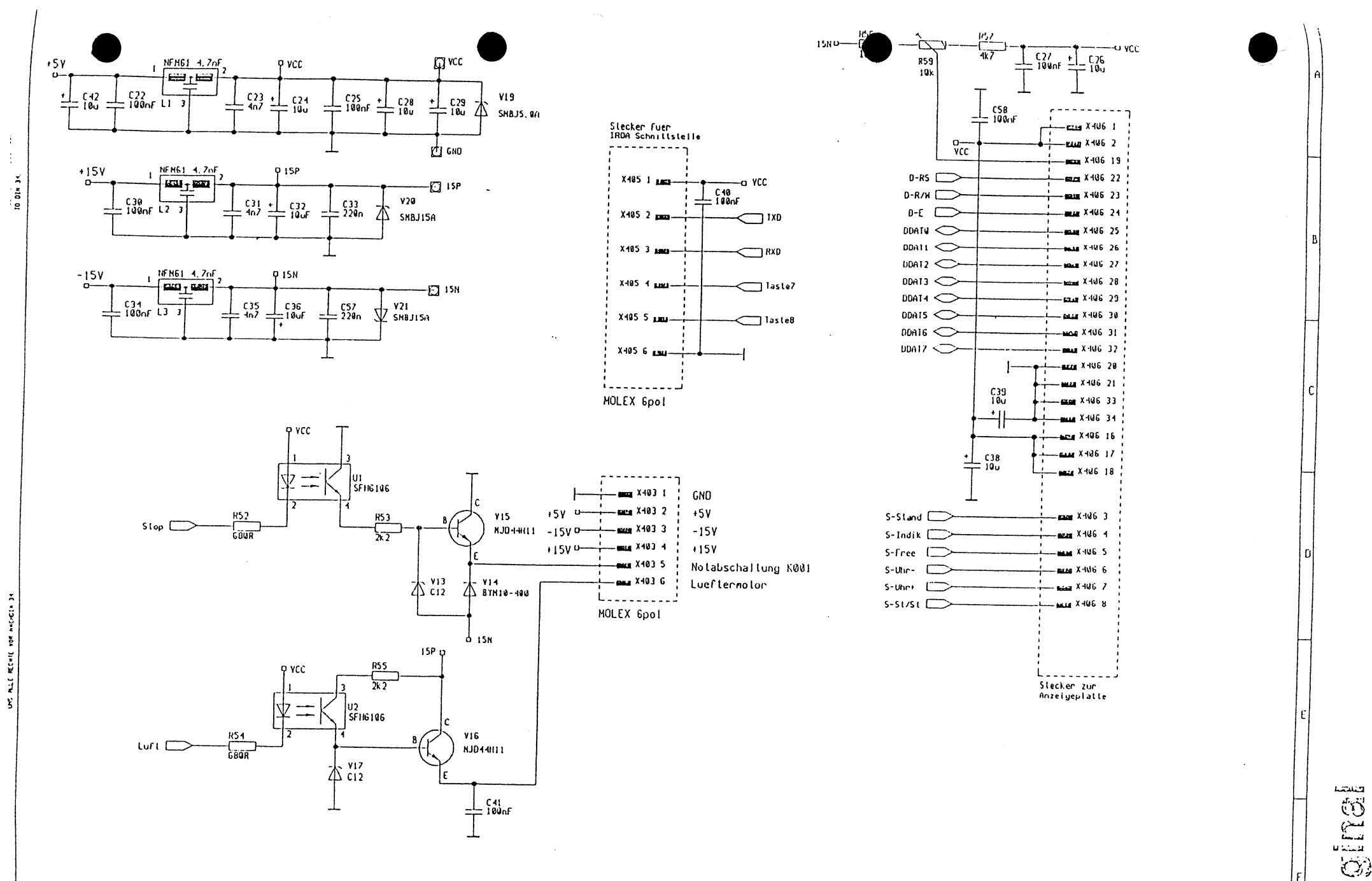

A	C517A, DIv.	44/99	A. W	DATUM	17.02.99	ERS. F.	
IST.	ÄNDERUNG	DATUM		NAME	A. W	ERS. D.	
				GEPR.		URSPR.	0G3105-7.2-000 42/97
				NORM		SCALE	1

HEINEN
ELEKTRONIK
Hunsrückstr. 7 - D42781 Haan

uniphy
Elektromedizin

BENENNUNG:
thermatur 210
Steuerplatine

44/99
SACHNUMMER: 0G3105-7.2-00A-3
SEITE 3
VON 4

1 2 3 4 5 6 7 8

Original

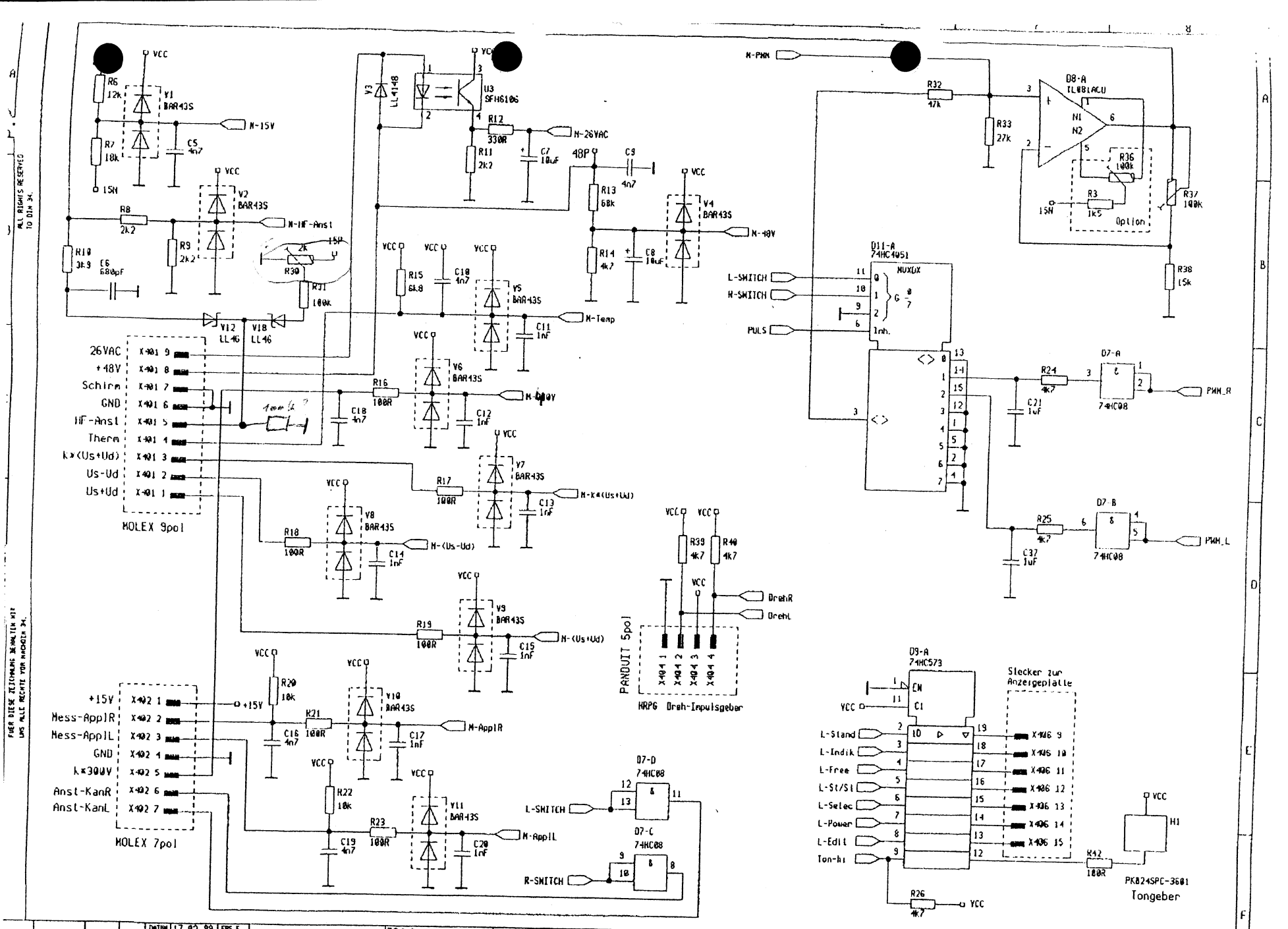
VCC
R6 12k
V1 BAR43S
M-15V
R7 10k
C5 4n7
15N
V2 BAR43S
R8 2k2
M-HF-Anst
R9 2k2
R10 3k9
C6 680pF
R30 2k
R31 100k
V12 LL46
V18 LL46
V3 LL4148
U3 SFH610G
R12 330R
M-26VAC
R11 2k2
C7 10uF
48P
C9 4n7
R13 68k
R14 4k7
C8 10uF
V4 BAR43S
M-48V
R15 6k8
C10 4n7
V5 BAR43S
M-Temp
C11 1nF
26VAC
+48V
Schirm
GND
HF-Anst
Therm
k*(Us+Ud)
Us-Ud
Us+Ud
X401 9
X401 8
X401 7
X401 6
X401 5
X401 4
X401 3
X401 2
X401 1
MOLEX 9pol
R16 100R
V6 BAR43S
M-600V
C12 1nF
C18 4n7
R17 100R
V7 BAR43S
M-k*(Us+Ud)
C13 1nF
R18 100R
V8 BAR43S
M-(Us-Ud)
C14 1nF
R19 100R
V9 BAR43S
M-(Us+Ud)
C15 1nF
+15V
Mess-ApplR
Mess-ApplL
GND
k*300V
Anst-KanR
Anst-KanL
X402 1
X402 2
X402 3
X402 4
X402 5
X402 6
X402 7
MOLEX 7pol
R20 10k
R21 100R
V10 BAR43S
M-ApplR
C16 4n7
C17 1nF
R22 10k
R23 100R
V11 BAR43S
M-ApplL
C19 4n7
C20 1nF
D7-D 74HC08
D7-C 74HC08
L-SWITCH
R-SWITCH
R39 4k7
R40 4k7
DrehR
DrehL
PANDUIT 5pol
X404 1
X404 2
X404 3
X404 4
HRPG Dreh-Impulsgeber
M-PWM
R32 47k
R33 27k
D8-A TL084ACD
N1
N2
R36 100k
R3 1k5
Option
R37 100k
R38 15k
D11-A 74HC4051
MUXDX
L-SWITCH
R-SWITCH
PULS
Inh.
R24 4k7
C21 1uF
D7-A 74HC08
PWM_R
R25 4k7
C37 1uF
D7-B 74HC08
PWM_L
D9-A 74HC573
EN
C1
L-Stand
L-Indik
L-Free
L-St/Sl
L-Selec
L-Power
L-Edit
Ton-hi
Stecker zur Anzeigeplatte
X406 9
X406 10
X406 11
X406 12
X406 13
X406 14
X406 15
R42 100R
H1
PKB24SPC-3601
Tongeber
R26 4k7
ALL RIGHTS RESERVED TO DIN 34.
FÜR DIESE ZEICHNUNG BEHALTEN WIR UNS ALLE RECHTE VOR NACHDR. 34.
A
C517A, Div.
44/99
R.W.
ÄNDERUNG
DATUM
DATUM 17.02.99
NAME R.W.
GEPR.
NORM
ERS.F.
ERS.A.
URSPR. 063185-7.2-000 42/97
SCALE 1
HEINEN ELEKTRONIK
Hunzenäckerstr. 7 - 8472/81 Maen
uniphy
Elektromedizin
BENENNUNG:
thermatur 210
Steuerplatine
44/99
SACHNUMMER: 063185-7.2-000A-3
SEITE 2
VON 4

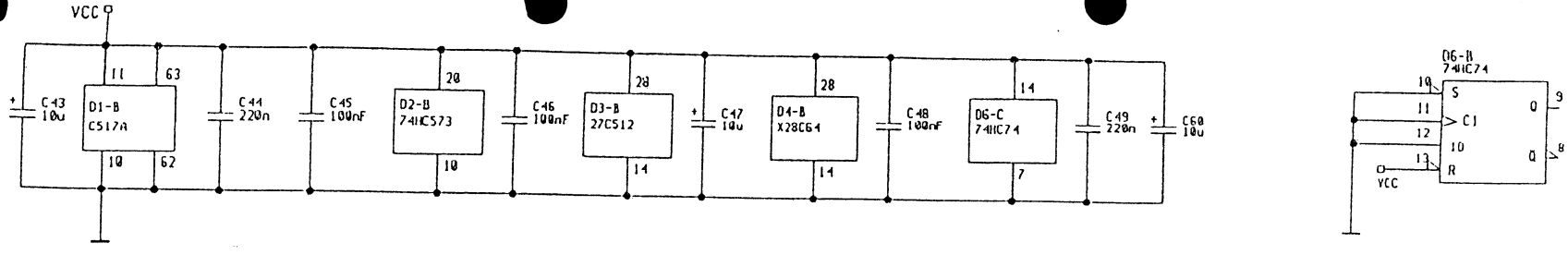

BLATT1

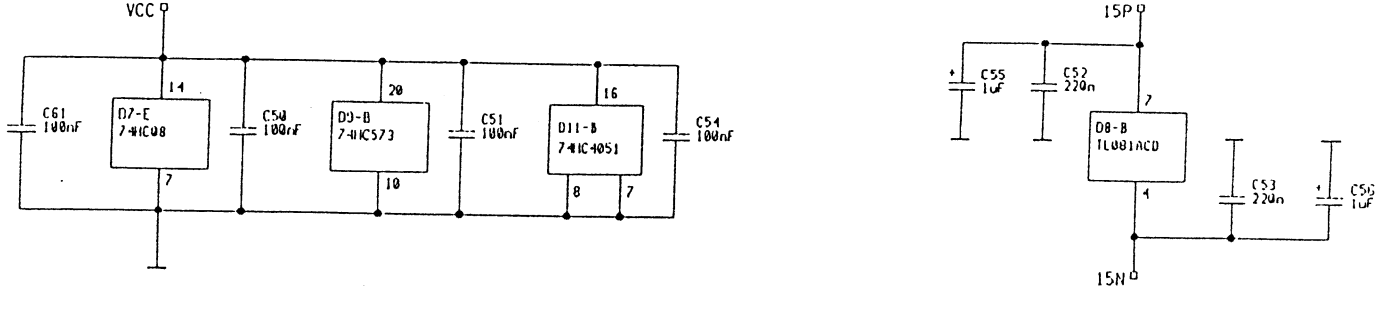

BLATT2

BLATT3

				DATUM	17.02.99	ERS. F.		HEINEN ELECTRONIK Hans-Böckler-Str. 7 - 42781 Haan	uniphy Elektromedizin	BENENNUNG: thermatur 210 Power	44/99		
A	C517A Div.	44/99	R.H	NAME	R.H	ERS. D.					SACHNUMMER: 063185-7.2-000-3	SEITE 4	
7051	ÄNDERUNG	DATUM		GEPR.		ÜNGPR.	063105-7.2-000 42797					VON 4	
				NORM		SCALE	1						

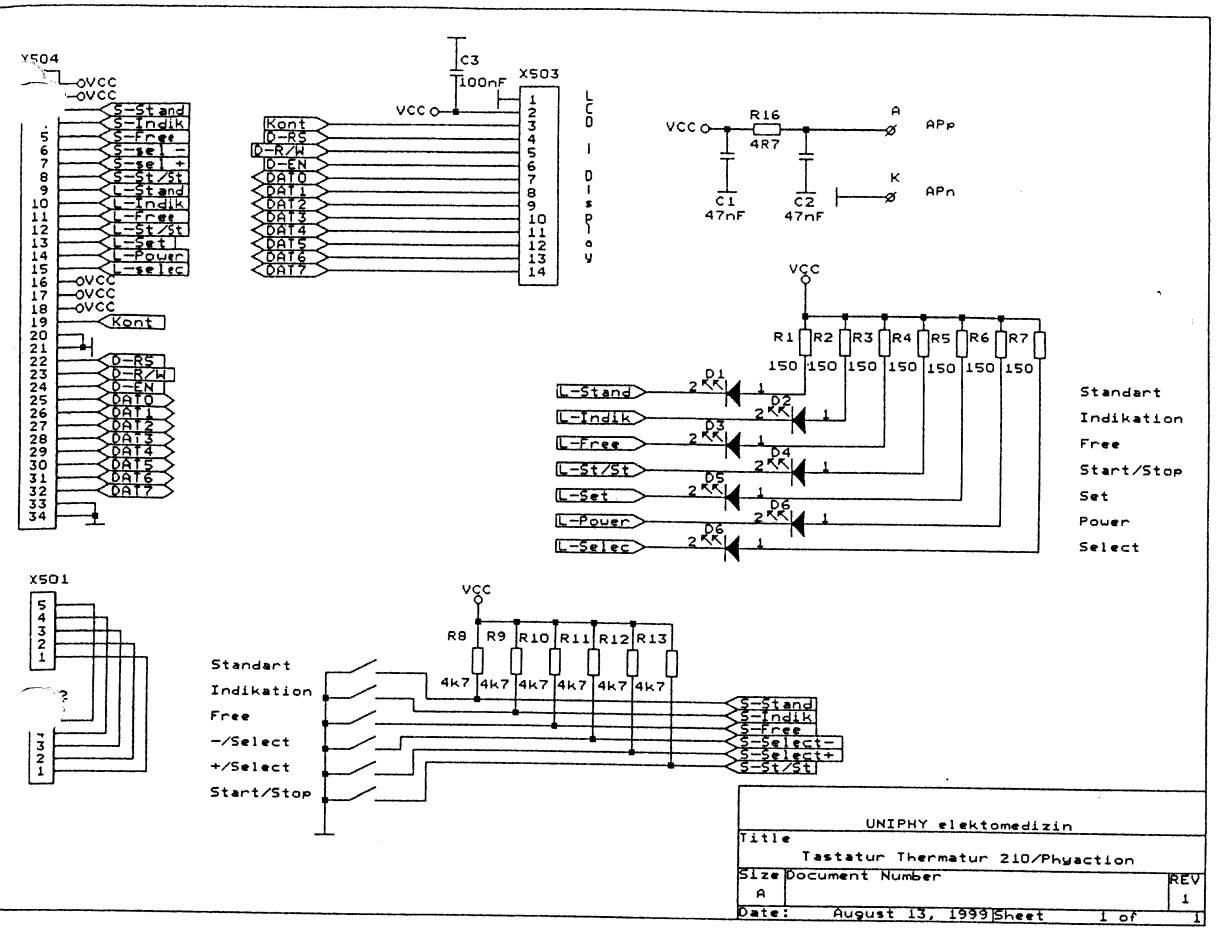

UNIPHY elektomedizin

Title: Tastatur Thermatur 210/Phyaction

Size: A | Document Number | REV: 1

Date: August 13, 1999 | Sheet 1 of 1

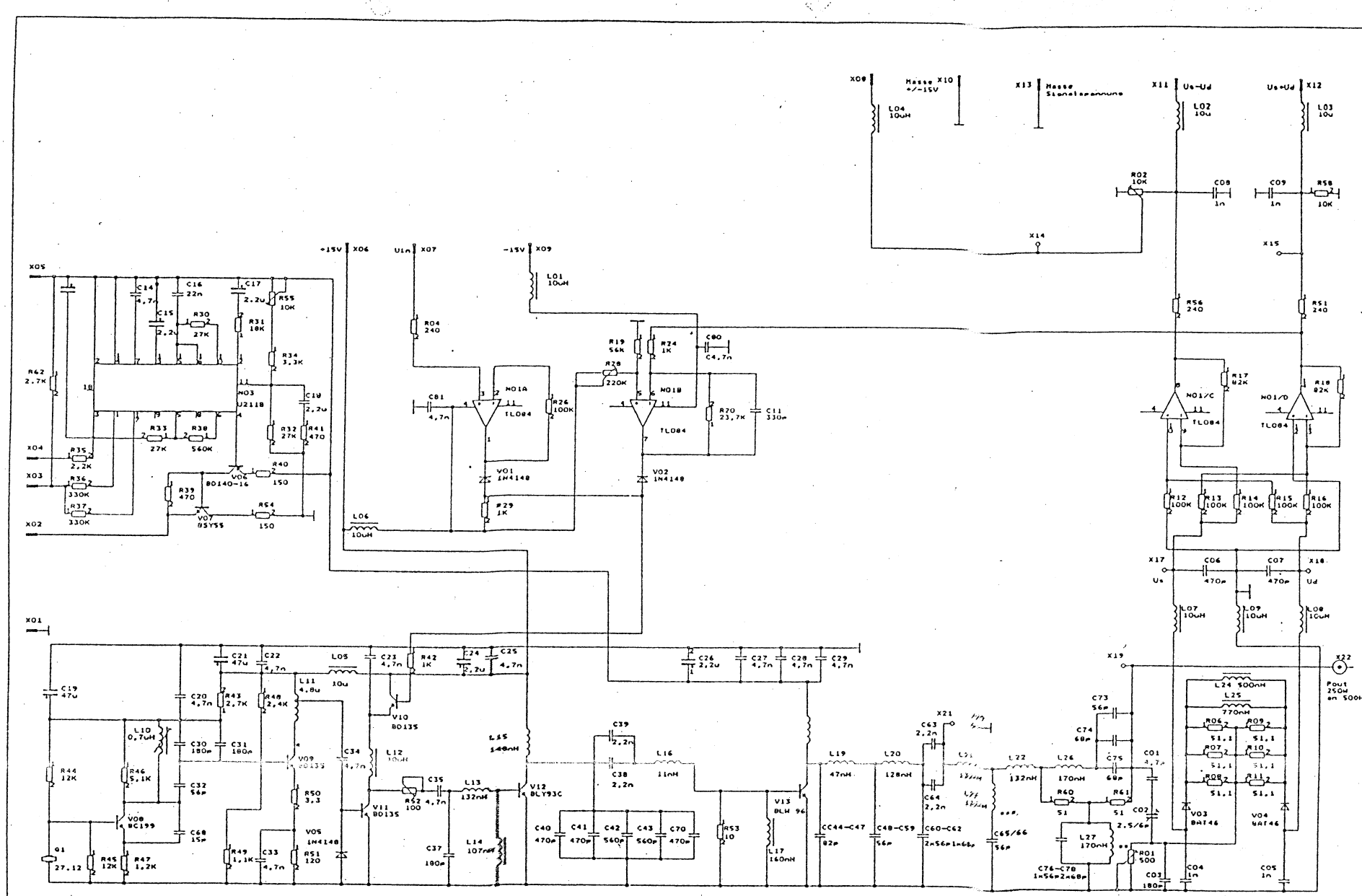

X04-X05:Bertiebsspannung fuer NO3

X03-X05:Synchronisierspannung fuer NO3

X02 :Ansteuerung Thyristor

*:Umin 10Vss

**:Abgleich 54,24Mhz

**:Abgleich Ud an X18 <100mV

bei 250W und 500hm und a<1,05

UNIPHY elektromedizin	
Title	HF Generator 250W/Type 210
Size C	Document Number
Date: February 17, 2000	Sheet of

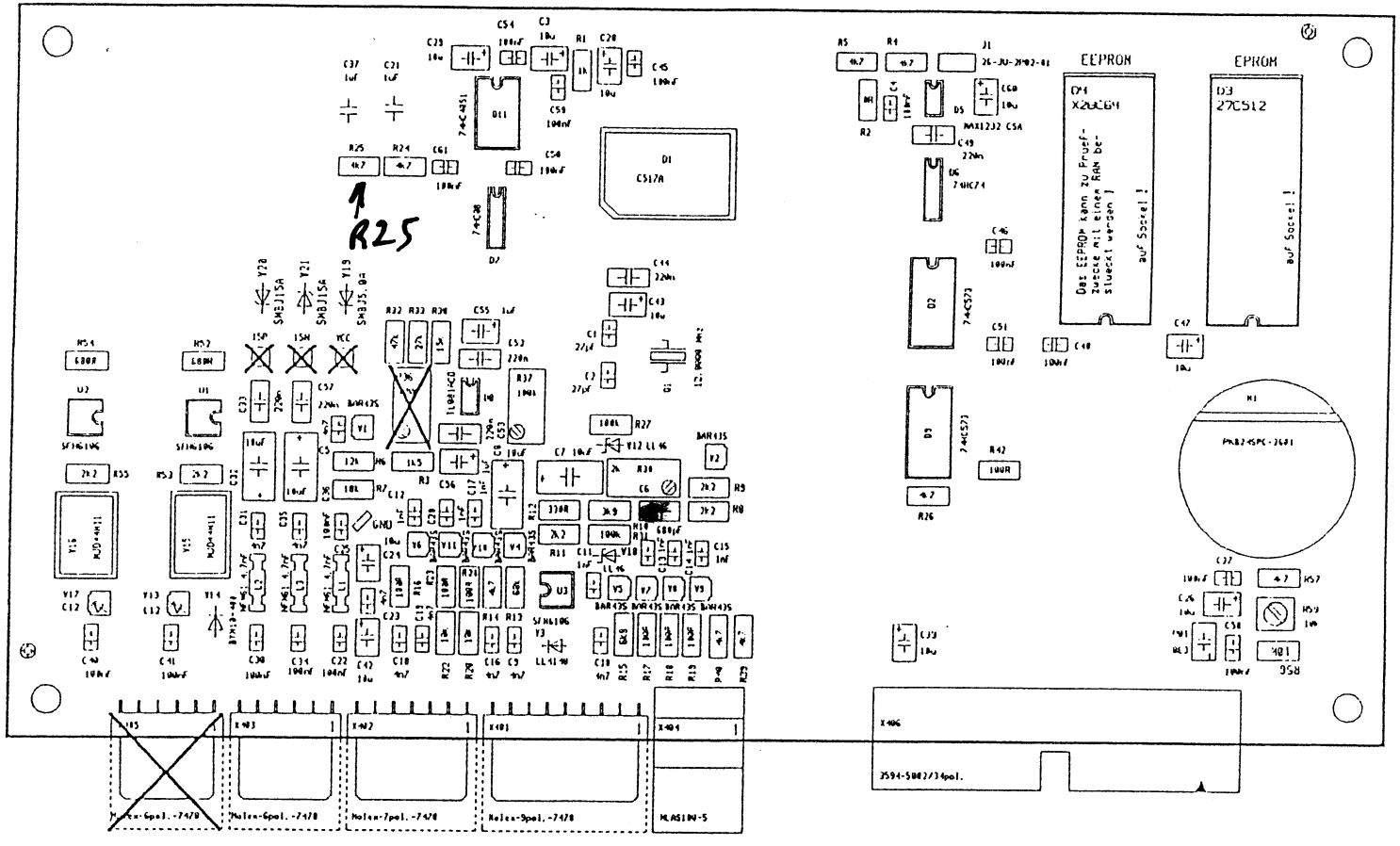

A	C517A,Div.	44/99	R.H	DATUM	23.02.99	ERS.F.		HEINEN ELEKTRONIK Hansjörg-Heinen-Str.7 - D-77761 Hausach	uniphy Elektromedizin	BENENNUNG: thermatur 210	44/99		
Änd.	Änderung	Datum		NAME		ERS.D.					SACHNUMMER: 063185-7.3-000A-3	SEITE 1	
				FERM.		UNGEN.	063185-7.3-000 42/97					VER 1	
						SCALE	0.7						

1 2 3 4 5 6 7 8

A B C D E F

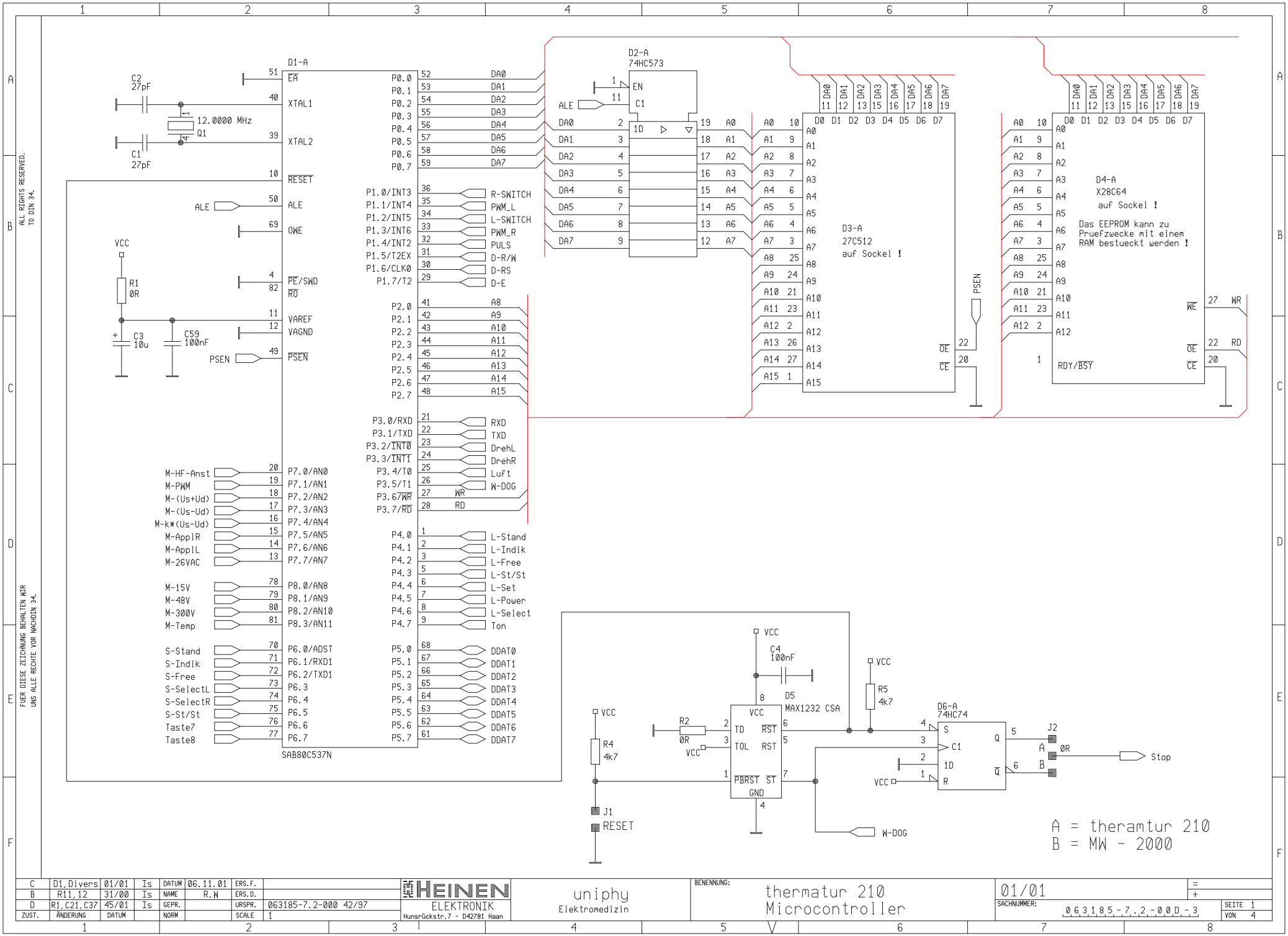

C	D1,Divers	01/01	Is	DATUM	06.11.01	ERS.F.	
B	R11,12	31/00	Is	NAME	R.W	ERS.D.	
D	R1,C21,C37	45/01	Is	GEPR.		URSPR.	063185-7.2-000 42/97
ZUST.	ÄNDERUNG	DATUM		NORM		SCALE	1

HEINEN ELEKTRONIK
Hunsrückstr.7 - D42781 Haan

uniphy
Elektromedizin

BENENNUNG: thermatur 210 Microcontroller

01/01

SACHNUMMER: 063185-7.2-00D-3

SEITE 1
VON 4

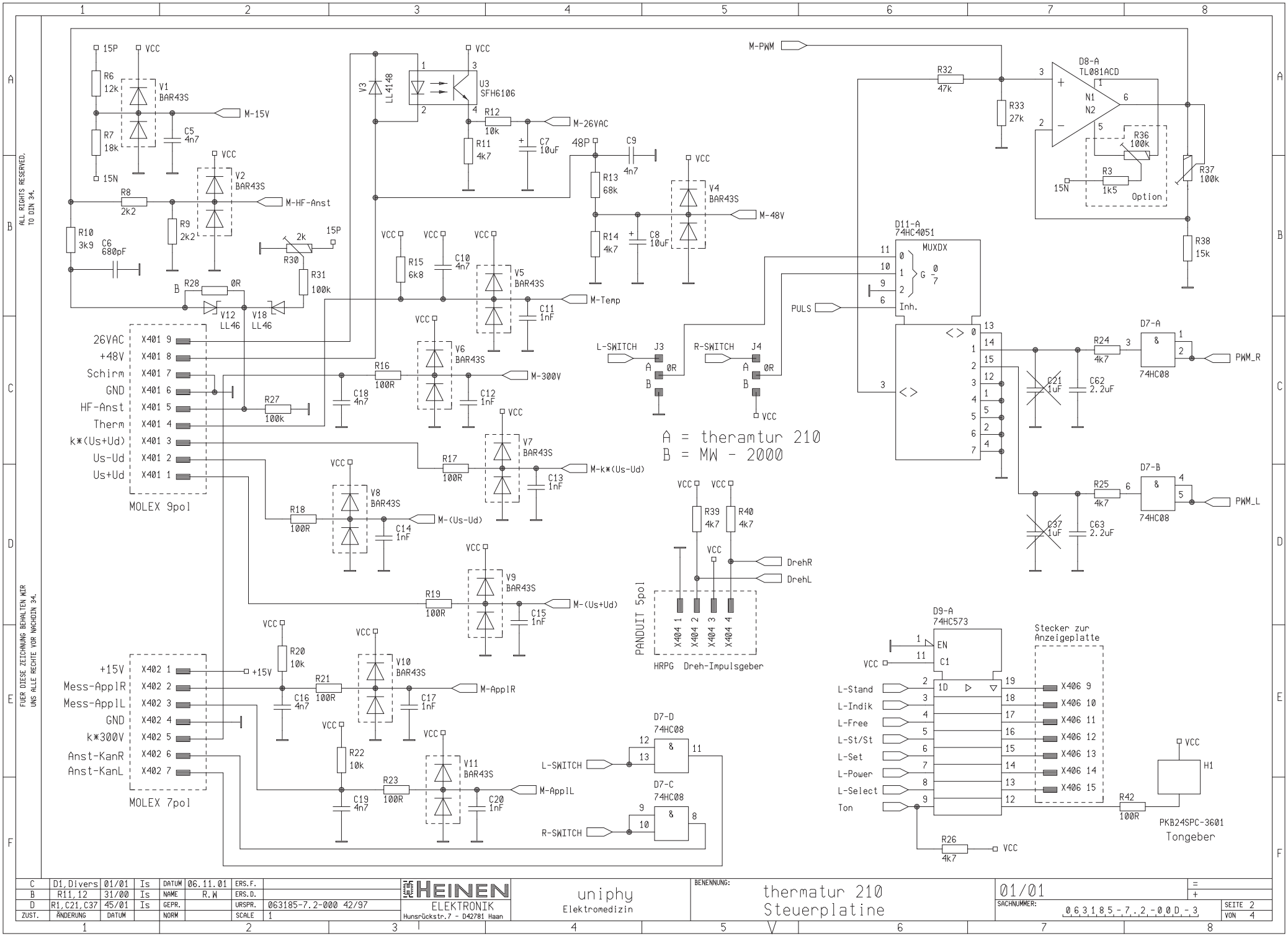

C	D1,Divers	01/01	Is	DATUM	06.11.01	ERS.F.	
B	R11,12	31/00	Is	NAME	R.W	ERS.D.	
D	R1,C21,C37	45/01	Is	GEPR.		URSPR.	063185-7.2-000 42/97
ZUST.	ÄNDERUNG	DATUM		NORM		SCALE	1

HEINEN ELEKTRONIK
Hunsrückstr.7 - D42781 Haan

uniphy
Elektromedizin

BENENNUNG: thermatur 210 Steuerplatine

01/01

SACHNUMMER: 063185-7.2-000-3

SEITE 2 VON 4

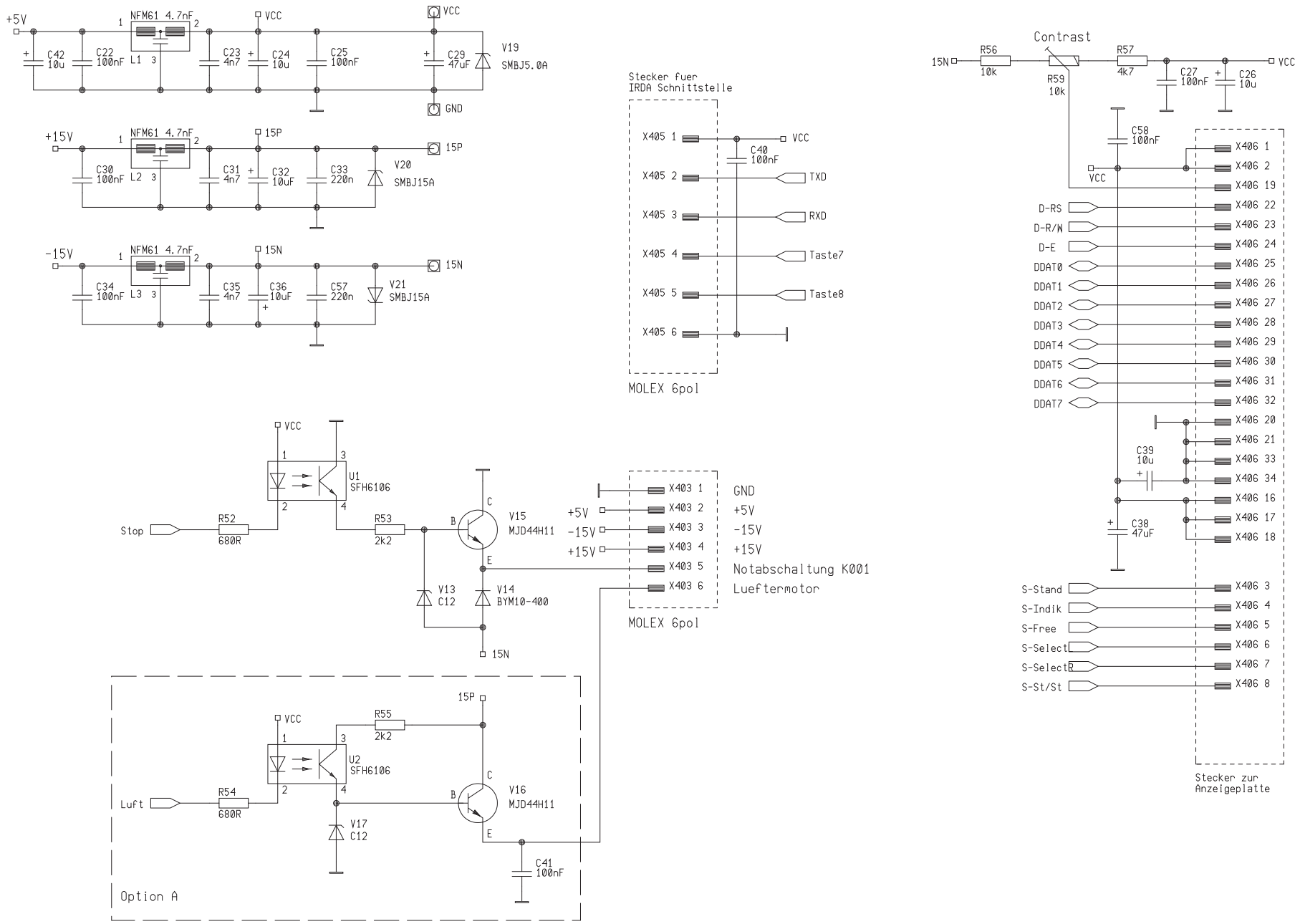

C	D1, Divers	01/01	Is	DATUM	06.11.01	ERS.F.	
B	R11, 12	31/00	Is	NAME	R.W	ERS.D.	
D	R1, C21, C37	45/01	Is	GEPR.		URSPR.	063185-7.2-000 42/97
ZUST.	ÄNDERUNG	DATUM		NORM		SCALE	1

HEINEN ELEKTRONIK
Hunsrückstr.7 - D42781 Haan

uniphy
Elektromedizin

BENENNUNG: thermatur 210 Steuerplatine

01/01

SACHNUMMER: 063185-7.2-00D-3

SEITE 3 VON 4

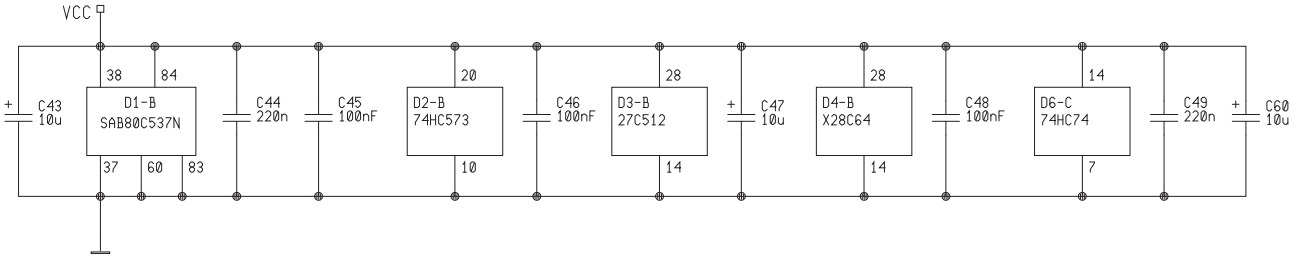

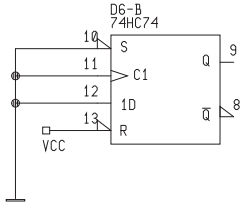

BLATT1

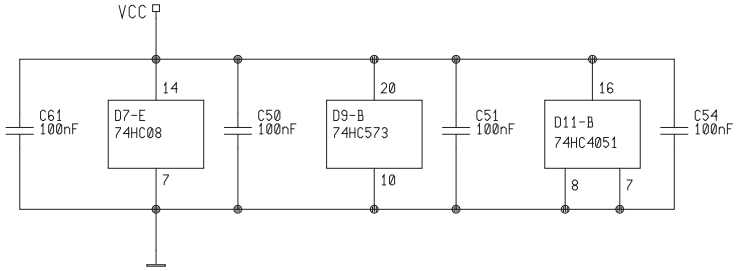

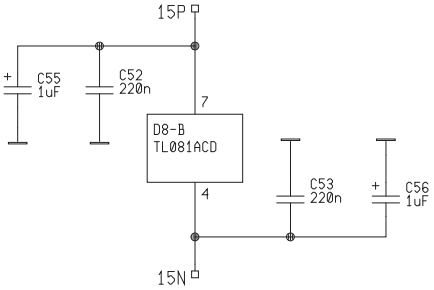

BLATT2

C	D1,Divers	01/01	Is	DATUM	06.11.01	ERS.F.		HEINEN ELEKTRONIK Hunsrückstr.7 - D42781 Haan	uniphy Elektromedizin	BENENNUNG: thermatur 210 Power	01/01	=
B	R11,12	31/00	Is	NAME	R.W	ERS.D.						+
D	R1,C21,C37	45/01	Is	GEPR.		URSPR.	063185-7.2-000 42/97				SACHNUMMER: 063185-7.2-00D-3	SEITE 4
ZUST.	ÄNDERUNG	DATUM		NORM		SCALE	1					VON 4

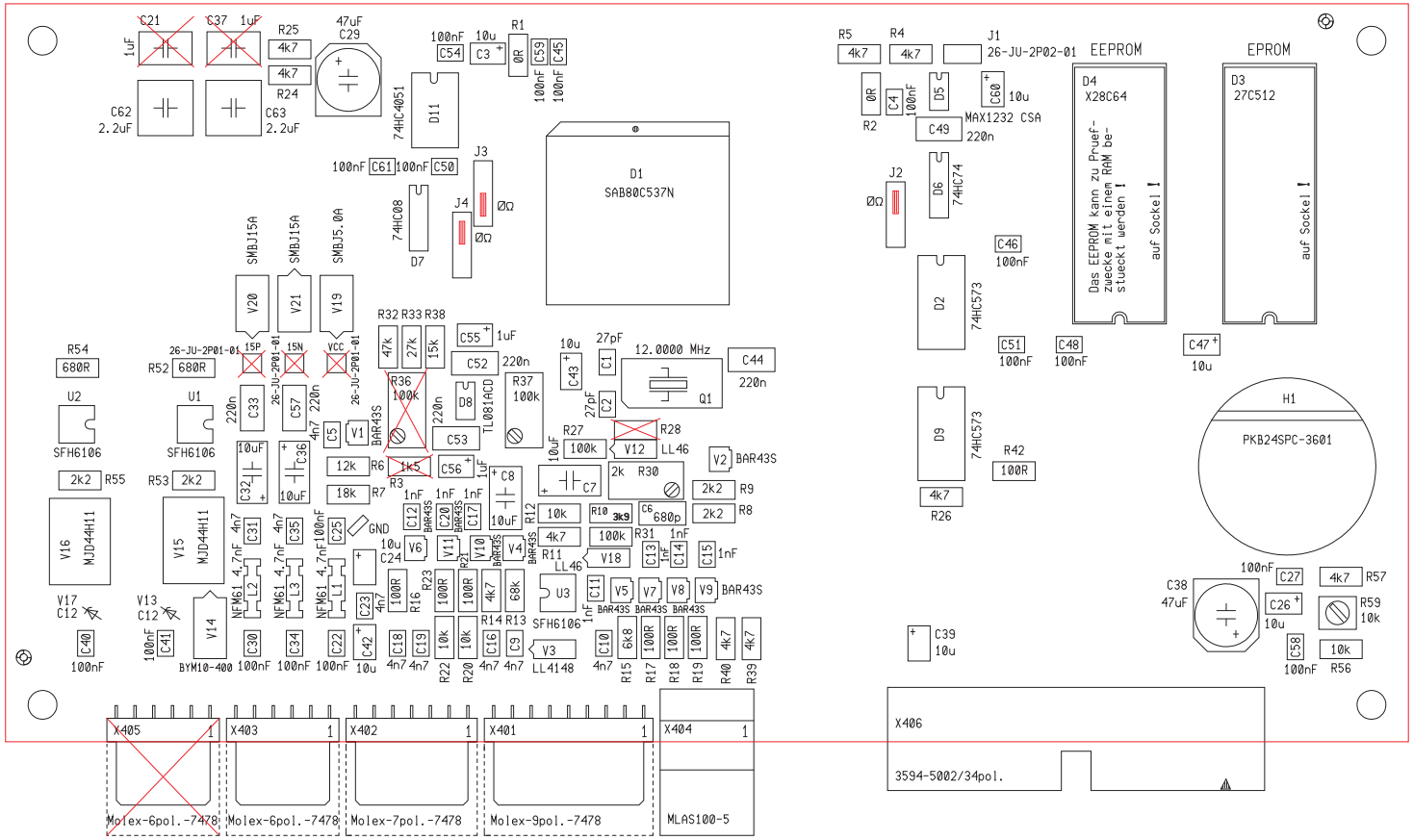

X = nicht bestücken

Layer 120,121

C	D1,Divers	01/01	Is	DATUM	06.11.01	ERS.F.		HEINEN ELEKTRONIK Hunsrückstr.7 - D42781 Haan	uniphy Elektromedizin	BENENNUNG: thermatur 210	01/01	=	
B	R11,12	31/00	Is	NAME	R.W	ERS.D.						+	
D	R1,C21,C37	45/01	Is	GEPR.		URSPR.	063185-7.3-000 42/97				SACHNUMMER: 063185-7.3-00D-3	SEITE 1	
ZUST.	ÄNDERUNG	DATUM		NORM		SCALE	0,7					VON 1	